Intermediate Algebra – Chapter 4

Lesson 1

Name: _____ **Date** _____

Tell whether the ordered pair is a solution of the system of linear equations.

1. (2, 6); $x + y = 8$
   $3x - y = 0$

$2+6=8$ $\quad$ $3(2)-6=0$

$8=8$ ✓ $\quad$ $6-6=0$

$0=0$ ✓

Yes

2. (8, 2); $x - y = 6$
   $2x - 10y = 4$

$8-2=6$ $\quad$ $2(8)-10(2)=4$

$6=6$ ✓ $\quad$ $16-20=4$

$-4 \neq 4$

No Sol

3. (-4, -2); $y = 2x + 6$
   $y = -3x - 14$

$-2 = 2(-4)+6$ $\quad$ $-2 = -3(-4)-14$

$-2 = -8+6$ $\quad$ $-2 = 12-14$

$-2 = -2$ ✓ $\quad$ $-2 = -2$ ✓

Yes

4. (-2, 1); $6x + 5y = -7$
   $2x - 4y = -8$

$6(-2)+5(1)=-7$ $\quad$ $2(-2)-4(1)=-8$

$-12+5=-7$ $\quad$ $-4-4=-8$

$-7=-7$ ✓ $\quad$ $-8=-8$ ✓

Yes

Solve the system of linear equations by graphing.

5. $y = -x + 7$
   $y = x + 1$

(3,4)

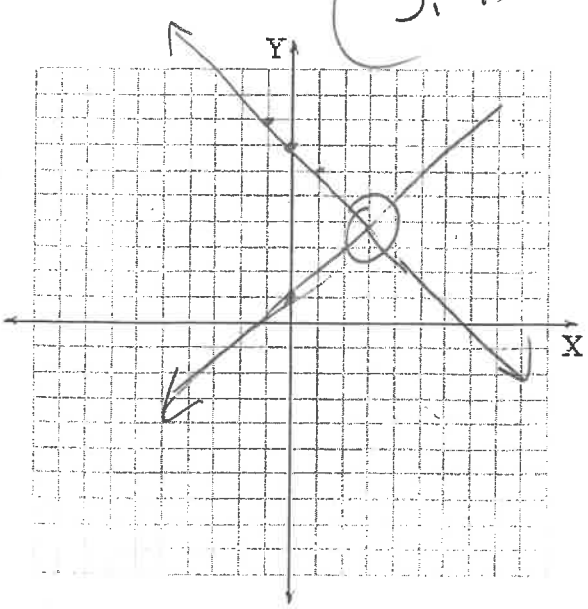

6. $y = -x + 4$
   $y = 2x - 8$

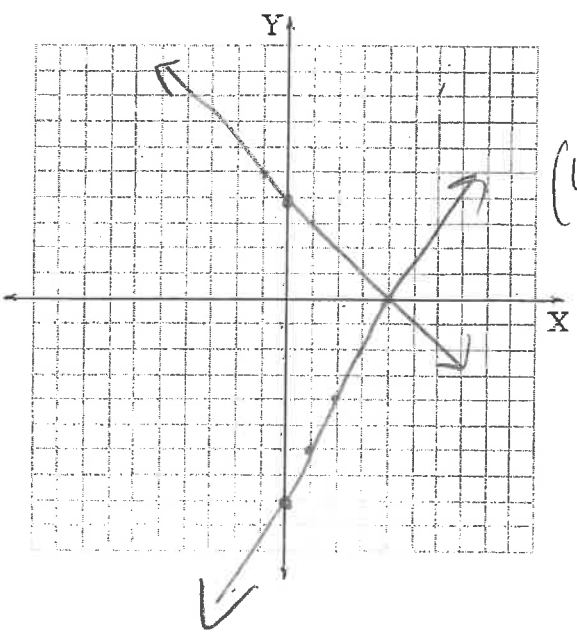

(4,0)

Intermediate Algebra – Chapter 4

Lesson 1

7. $9x + 3y = -3$
   $2x - y = -4$

$3y = -9x - 3$
$y = -3x - 1$
$-y = -2x - 4$
$y = 2x + 4$

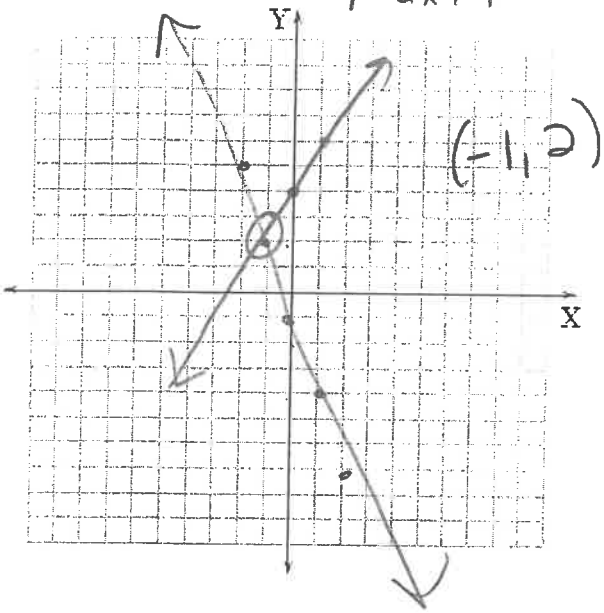

8. $4x - 4y = 20$
   $y = -5$

$-4y = -4x + 20$
$y = x - 5$

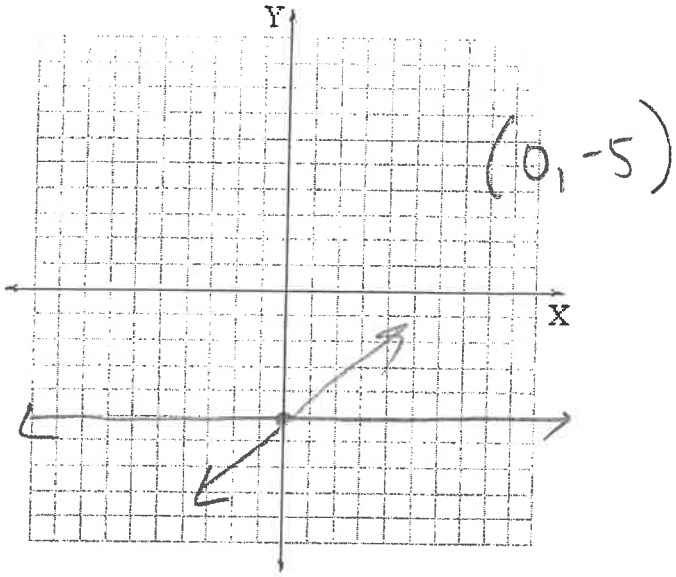

9. $x - 4y = -4$
   $-3x - 4y = 12$

$-4y = -x - 4$
$y = \frac{1}{4}x + 1$
$-4y = 3x + 12$
$y = -\frac{3}{4}x - 1$

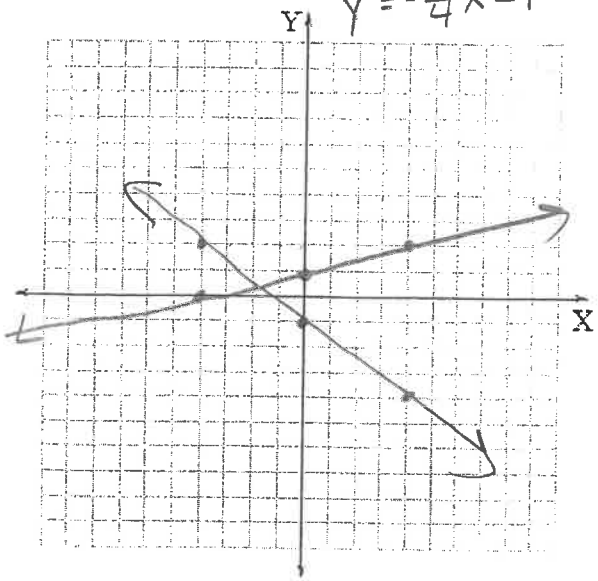

10. $3y + 4x = 3$
    $x + 3y = -6$

$3y = -4x + 3$
$y = -\frac{4}{3}x + 1$
$3y = -x - 6$
$y = -\frac{1}{3}x - 2$

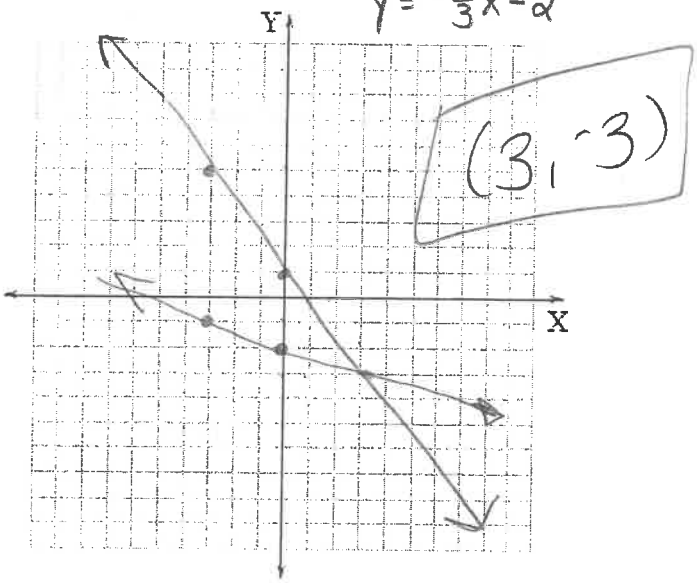

Intermediate Algebra – Chapter 4

Lesson 2

Name: _____ **Date** _____

Tell which equation you would choose to solve for one of the variables. Explain.

1. $x + 4y = 10$
   $x - 2y = 0$

Either for x

2. $3x - y = 0$
   $2x + y = -10$

2nd for y

3. $5x + 3y = 11$
   $5x - y = 5$

2nd for y

4. $3x - 2y = 19$
   $x + y = 8$

2nd for x or y

Solve the system of linear equations by substitution. Check your solution.

5. $x = 17 - 4y$
   $y = x - 2$

$X = 17 - 4(x-2)$
$X = 17 - 4x + 8$
$X = -4x + 25$
$+4x \quad +4x$
$5x = 25$
$X = 5$

$Y = 5 - 2$
$Y = 3$

$\boxed{(5, 3)}$

6. $6x - 9 = y$
   $y = -3x$

$6x - 9 = -3x$
$-6x \quad -6x$
$-9 = -9x$
$1 = x$
$Y = -3(1)$
$Y = -3$

$\boxed{(1, -3)}$

7. $x = 16 - 4y$
   $3x + 4y = 8$

$3(16 - 4y) + 4y = 8$
$48 - 12y + 4y = 8$
$48 - 8y = 8$
$-48 \quad -48$
$-8y = -40$
$y = 5$
$X = 16 - 4(5)$
$X = 16 - 20$
$X = -4$

$\boxed{(-4, 5)}$

8. $-5x + 3y = 23$
   $y = 10x - 8$

$-5x + 3(10x - 8) = 23$
$-5x + 30x - 24 = 23$
$25x - 24 = 23$
$+24 \quad +24$
$25x = 47$
$x = \frac{47}{25}$

$Y = \cancel{10}^{2}\left(\frac{47}{\cancel{25}_{5}}\right) - 8$
$Y = \frac{94}{5} - \frac{40}{5}$
$Y = \frac{46}{5}$

$\boxed{\left(\frac{47}{25}, \frac{46}{5}\right)}$

Solve the system of linear equations by using substitution. Check your solution.

9. $5x + 2y = 9$

$x + y = -3$
$-y \quad -y$
$x = -y - 3$
$5(-y-3) + 2y = 9$
$-5y - 15 + 2y = 9$
$-3y - 15 = 9$
$+15 \quad +15$
$-3y = 24$
$y = -8$

$x - 8 = -3$
$+8 \quad +8$
$x = 5$

$\boxed{(5, -8)}$

10. $11x - 7y = -14$

$x - 2y = -4$
$+2y \quad +2y$
$x = 2y - 4$
$11(2y-4) - 7y = -14$
$22y - 44 - 7y = -14$
$15y - 44 = -14$
$+44 \quad +44$
$15y = 30$
$y = 2$

$x - 2(2) = -4$
$x - 4 = -4$
$+4 \quad +4$
$x = 0$

$\boxed{(0, 2)}$

11. A farmer plants corn and wheat on a 180-acre farm. The farmer wants to plant three times as many acres of corn as wheat. Write a system of linear equations that represents this situation. How many acres of each crop should the farmer plant?

Corn = y wheat = x
$x + y = 180$
$y = 3x$
$x + 3x = 180$
$4x = 180$
$x = 45$
wheat

$y = 3(45)$
$y = 135$
corn

12. A company that offers tubing trips down a river rents tubes for a person to use and "cooler" tubes to carry food and water. A group spends $270 to rent a total of 15 tubes. Write a system of linear equations that represents this situation. How many of each type of tube does the group rent?

Intermediate Algebra – Chapter 4
Lesson 3

Name: _____ Date _____

Solve the system of linear equations by elimination.

1. $x + 2y = 13$
$-x + y = 5$

$3y = 18$
$y = 6$
$-x + 6 = 5$
$-6 \quad -6$
$-x = -1$
$x = 1$
$(1, 6)$

2. $9x + y = 2$
$-4x - y = -17$

$5x = -15$
$x = -3$
$9(3) + y = 2$
$27 + y = 2$
$-27 \quad -27$
$y = -25$
$(-3, -25)$

3. $-x + y = 4$
$x + 3y = 4$

$4y = 8$
$y = 2$
$x + 3(2) = 4$
$x + 6 = 4$
$-6 \quad -6$
$x = -2$
$(-2, 2)$

4. $4x - 9y = -21$
$-4x - 3y = 9$

$-12y = -12$
$y = 1$
$4x - 9(1) = -21$
$4x - 9 = -21$
$+9 \quad +9$
$4x = -12$
$x = -3$
$(-3, 1)$

Intermediate Algebra – Chapter 4

Lesson 3

Solve the system of liner equations by elimination.

5. $8x - 5y = 11 \longrightarrow 8x - 5y = 11$

$4x - 3y = 5 \xrightarrow{-2} -8x + 6y = -10$

$y = 1$

$4x - 3(1) = 5$

$4x - 3 = 5$

$+3 \quad +3$

$4x = 8$

$x = 2$

$(2, 1)$

6. $10x - 9y = 46 \longrightarrow 10x - 9y = 46$

$-2x + 3y = 10 \xrightarrow{3} -6x + 9y = 30$

$4x = 76$

$x = 19$

$-2(19) + 3y = 10$

$-38 + 3y = 10$

$+38 \quad +38$

$3y = 48$

$y = 16$

$\boxed{(19, 16)}$

7. $-2x - 5y = 9 \xrightarrow{3} -6x - 15y = 27$

$3x + 11y = 4 \xrightarrow{2} 6x + 22y = 8$

$7y = 35$

$y = 5$

$-2x - 5(7) = 9$

$-2x - 35 = 9$

$+35 \quad +35$

$-2x = 44$

$x = -22$

$\boxed{(-22, 5)}$

8. $12x - 7y = -2 \xrightarrow{2} 24x - 14y = -4$

$8x + 11y = 30 \xrightarrow{-3} -24x - 33y = -90$

$-47y = -94$

$y = 2$

$8x + 11(2) = 30$

$8x + 22 = 30$

$-22 \quad -22$

$8x = 8$

$x = 1$

$\boxed{(1, 2)}$

Solve the system of linear equations using any method. Explain why you chose the method.

9. $-6y + 2 = -4x$

$y - 2 = x$
$+2 \quad +2$
$y = x + 2$

$-6(x+2) + 2 = -4x$
$-6x - 12 + 2 = -4x$
$-6x - 10 = -4x$
$+6x \qquad +6x$
$-10 = 2x$
$-5 = x$

$y - 2 = -5$
$+2 \quad +2$
$y = -3$

$\boxed{(-5, -3)}$

10. $3x + y = \frac{1}{3}$
$2x - 3y = \frac{8}{3}$

$9x + 3y = 1 \xrightarrow{\cdot 3} 27x + 9y = 3$
$6x - 9y = 8 \longrightarrow 6x - 9y = 8$
$33x = 11$
$x = \frac{1}{3}$

$3(\frac{1}{3}) + y = \frac{1}{3}$
$1 + y = \frac{1}{3}$
$-1 \qquad -\frac{3}{3}$
$y = -\frac{2}{3}$

$\boxed{(\frac{1}{3}, -\frac{2}{3})}$

11. Solve for x, y, and z in the system of equations. Explain your steps.

$x + 7y + 3z = 29$
$3z + x - 2y = -7$
$5y = 10 - 2x$

$x + 7y + 3z = 29 \longrightarrow x + 7y + 3z = 29$
$x - 2y + 3z = -7 \xrightarrow{-1} -x + 2y - 3z = 7$
$2x + 5y = 10$

(1) $9y = 36$
$\boxed{y = 4}$

(2) $2x + 5(4) = 10$
$2x + 20 = 10$
$-20 \quad -20$
$2x = -10$
$\boxed{x = -5}$

(3) $-5 + 7(4) + 3z = 29$
$-5 + 28 + 3z = 29$
$23 + 3z = 29$
$-23 \qquad -23$
$3z = 6$
$\boxed{z = 2}$

$\boxed{(-5, 4, 2)}$

Intermediate Algebra – Chapter 4
Lesson 4

Name: _____ Date _____

Solve the system of linear equations.

1. $y = -2x - 4$
   $y = 2x - 4$

$\frac{2y}{2} = \frac{-8}{2}$
$y = -4$

$-4 = 2x - 4$
$+4 \quad +4$

$\frac{0}{2} = \frac{2x}{2}$

$0 = x$

$(0, -4)$

2. $y = -6x - 8 \rightarrow -y = 6x + 8$
   $y = -6x + 8 \rightarrow y = -6x + 8$

$0 = 16$

No Sol

3. $-x + 2y = 7$
   $x - 2y = 7$

$0 = 14$

No Sol

4. $3x - y = 6$
   $-3x + y = -6$

$0 = 0$

Inf Many

Sol

Intermediate Algebra – Chapter 4

Lesson 4

5. $4x + 4y = -8 \longrightarrow 4x + 4y = -8$

$-2x - 2y = 4 \xrightarrow{2} -4x - 4y = 8$

$0 = 0$

Inf Many ARN

6. $15x - 5y = -20 \longrightarrow 15x - 5y = -20$

$-3x + y = 4 \xrightarrow{5} -15x + 5y = 20$

$0 = 0$

Inf Many ARN

Use only slopes and y-intercepts of the graphs of the equations to determine whether the system of linear equations has one solution, no solutions, or infinitely many solutions. Explain.

7. $Y = 7x + 13$

$-21x + 3y = 39$

$Y = 7x + 13$

S - 7

I - 13

$-21x + 3y = 39$

$+21x \quad +21y$

$\frac{3y}{3} = \frac{21x}{3} + \frac{39}{3}$

$Y = 7x + 13$

S - 7

I - 13

Same S + Y-int, so ARN

8. $Y = -6x - 2$

$12x + 2y = -6$

$Y = -6x - 2$

S - -6

I - -2

$12x + 2y = -6$

$-12x \quad -12y$

$\frac{2y}{2} = \frac{-12x}{2} - \frac{6}{2}$

$Y = -6x - 2$

S - -6

I - 2

Same S + Y-int so ARN

9. $4x + 3y = 27$

$4x - 3y = -27$

$4x + 3y = 27$

$-4x \quad -4x$

$\frac{3y}{3} = \frac{-4x}{3} + \frac{27}{3}$

$y = -\frac{4}{3}x + 9$

S - $-\frac{4}{3}$

Y - 9

$4x - 3y = -27$

$-4x \quad +4x$

$\frac{-3y}{-3} = \frac{-4x}{-3} - \frac{27}{-3}$

$y = \frac{4}{3}x + 9$

S - $\frac{4}{3}$

Y - 9

Same Y-int diff Slope → 1 solution

10. $2x - 2y = 16$

$3x - 6y = 30$

$2x - 2y = 16$

$-2x \quad -2y$

$\frac{-2y}{-2} = \frac{-2x}{-2} + \frac{16}{-2}$

$y = x - 8$

S - 1

I - -8

$3x - 6y = 30$

$-3x \quad -3x$

$\frac{-6y}{-6} = \frac{-3x}{-6} + \frac{30}{-6}$

$y = \frac{1}{2}x - 5$

S - $\frac{1}{2}$

I - -5

Diff S + Y-int

One sol

Intermediate
[redacted] Algebra – Chapter [redacted] 4
Lesson 6

Evaluate the determinant.

1. $\begin{bmatrix} 2 & 3 \\ 4 & 5 \end{bmatrix}$ $2(5)-4(3) \Rightarrow 10-12$

$= \boxed{-2}$

2. $\begin{bmatrix} 3 & -5 \\ 1 & 4 \end{bmatrix}$ $3(4)-1(-5)$

$12-(-5)$

$12+5$

$\boxed{17}$

3. $\begin{bmatrix} 4 & -2 \\ 3 & -3 \end{bmatrix}$ $4(-3)-3(-2)$

$-12-(-6)$

$-12+6$

$\boxed{-6}$

4. $\begin{bmatrix} \frac{1}{2} & \frac{1}{3} \\ \frac{1}{4} & \frac{1}{6} \end{bmatrix}$ $\frac{1}{2}\left(\frac{1}{6}\right)-\frac{1}{4}\left(\frac{1}{3}\right)$

$\frac{1}{12}-\frac{1}{12}$

$\boxed{0}$

5. $\begin{bmatrix} 1 & 0 & -1 \\ 0 & 3 & 4 \\ 0 & 0 & 4 \end{bmatrix} \begin{matrix} 1 & 0 \\ 0 & 3 \\ 0 & 0 \end{matrix}$

$[1(3)(4)+0(4)(0)+(-1)(0)(0)]-[(0)(3)(-1)+(0)(4)(1)+(4)(0)(0)]$

$[12+0+0]-[0+0+0]$

$12-0$

$\boxed{12}$

6. $\begin{bmatrix} 2 & 3 & 4 \\ 0 & -4 & 6 \\ 0 & 0 & -5 \end{bmatrix} \begin{matrix} 2 & 3 \\ 0 & -4 \\ 0 & 0 \end{matrix}$

$[2(-4)(-5)+(3)(6)(0)+(4)(0)(0)]-[0(-4)(4)+(0)(6)(2)+(-5)(0)($

$[40+0+0]-[0+0+0]$

$40-0$

$\boxed{40}$

7. $\begin{bmatrix} a & b & 0 \\ 0 & a & b \\ b & 0 & a \end{bmatrix} \begin{matrix} a & b \\ 0 & a \\ b & 0 \end{matrix}$

$(a)(a)(a)+(b)(b)(b)+(0)(0)(0)]-[(b)(a)(0)+(0)(b)(a)+(a)(0)(0)]$

$[a^3+b^3+0]-[0+0+0]$

a^3+b^3-0

$\boxed{a^3b^3}$

8. $\begin{bmatrix} a & b & c \\ c & a & b \\ b & c & a \end{bmatrix} \begin{matrix} a & b \\ c & a \\ b & c \end{matrix}$

$[(a)(a)(a)+(b)(b)(b)+(c)(c)(c)]-[(b)(a)(c)+(c)(b)(a)+(c)($

$[a^3+b^3+c^3]-[abc+abc+abc]$

$\boxed{a^3+b^3+c^3-3abc}$

Key

College Algebra – ~~Chapter 9~~ chap 4

~~Lesson 1~~ Lesson 5

Solve the linear system on another piece of paper.

1. $x + y - 2z = 5$
   $-x + 2y + z = 2$
   $2x + 3y - z = 9$

   $(1, 2, -1)$

2. $x + 4y - 6z = -1$
   $2x - y + 2z = -7$
   $-x + 2y - 4z = 5$

   $(-3, -1, -1)$

3. $2x + y - z = 9$
   $-x + 6y + 2z = -17$
   $5x + 7y + z = 4$

   $(3, -1, -4)$

4. $3x + 2y - z = 8$
   $-3x + 4y + 5z = -14$
   $x - 3y + 4z = -14$

   $(1, 1, -3)$

5. $2x + 2y + 5z = -1$
   $2x - y + z = 2$
   $2x + 4y - 3z = 14$

   $\left(\frac{151}{64}, \frac{9}{8}, \frac{-51}{32}\right)$

6. $3x + 2y - 3z = -2$
   $7x - 2y + 5z = -14$
   $2x + 4y + z = 6$

   $\left(\frac{-22}{13}, \frac{29}{13}, \frac{6}{13}\right)$

7. $3x - y + 2z = 4$
   $6x - 2y + 4z = -8$
   $2x - y + 3z = 10$

   No Sol

8. $5x + y - z = 6$
   $x + y + z = 2$
   $12x + 4y = 10$

   No Sol

Intermediate Algebra – Chapter 4
Lesson 7

Name: _____ Date _____

Tell whether the ordered pair is a solution of the system of linear inequalities.

1. (-4, 3) Yes

2. (-3, -1) No

3. (-2, 5) No

4. (1, 1) Yes

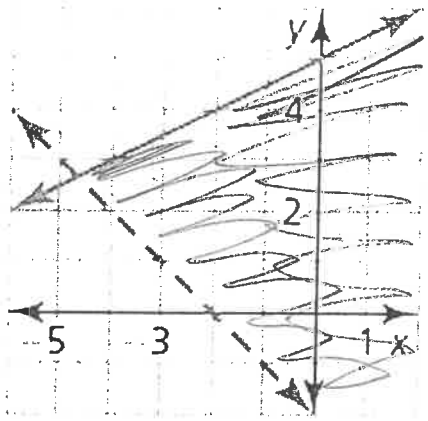

Tell whether the ordered pair is a solution of the system of linear inequalities.

5. (-5, 2); $y < 4$
$y > x + 3$

2L-5
No

6. (1, -1); $y > -2$
$y > x - 5$

$-1 > -2$
Yes

$-1 > 1 - 5$
$-1 > -4$
Yes

Yes

7. (0, 0); $y \leq x + 7$
$y \geq 2x + 3$

$0 \leq 0 + 7$
$0 \leq 7$
Yes

$0 \geq 2(0) + 3$
$0 \geq 3$
No

No

8. (4, -3); $y \leq -x + 1$
$y \leq 5x - 2$

$-3 \leq -4 + 1$
$-3 \leq -3$
Yes

$-3 \leq 5(4) - 2$
$-3 \leq 20 - 2$
$-3 \leq 18$
Yes

Yes

Graph the system of linear inequalities.

9. $y > -3$
   $y \geq 5x$

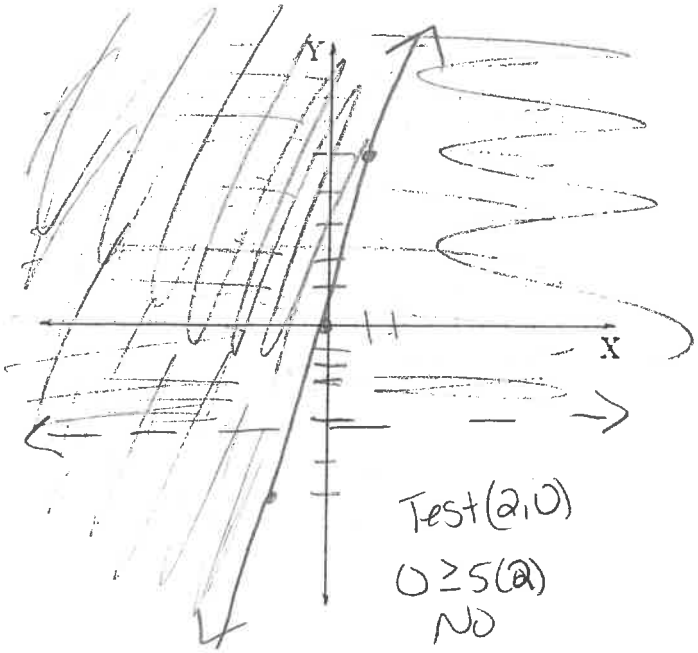

10. $y < x - 1$ 0<-1 No
    $y \geq x + 1$ 0≥1 No

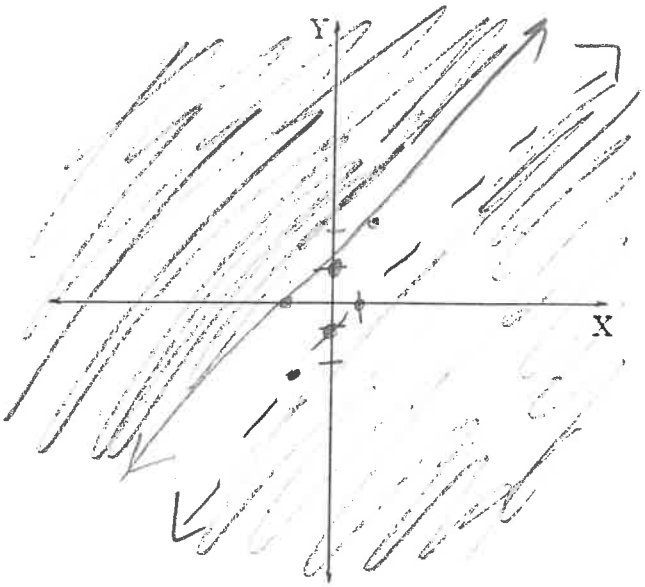

11. $x + y > 4$ 0>4 No
    $y \geq \frac{3}{2}x - 9$ y>-x+4 0≥-9 Yes

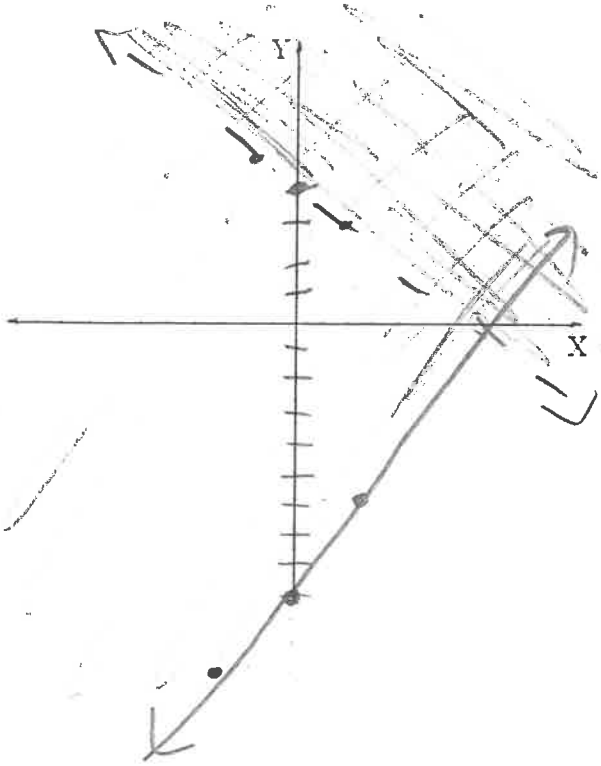

12. $2x + y \leq 5$ y≤-2x+5 0≤5 Yes
    $y + 2 \geq -2x$ y≥-2x-2 2≥0 Yes

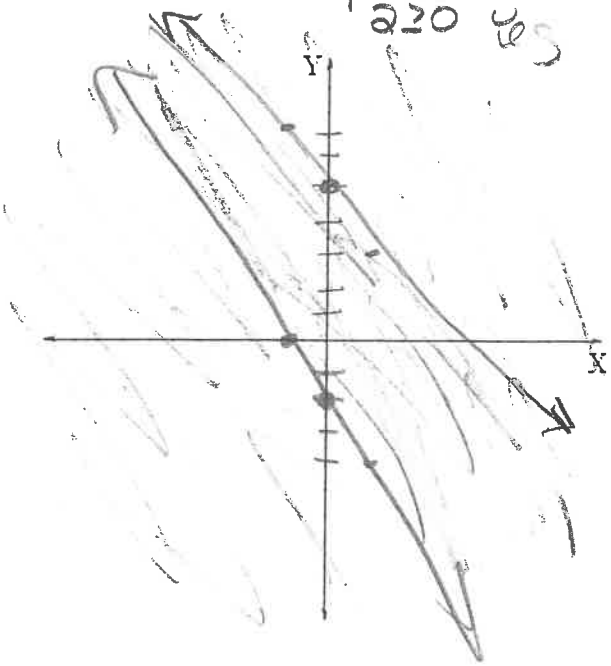

Intermediate Algebra – Chapter 5
Lesson 1

Name: _____ **Date** _____

Use the distributive property to find the product.

1. (y + 4)(y + 6)

$y^2 + 4y + 6y + 24$

$y^2 + 10y + 24$

2. (a + 8)(a – 3)

$a^2 - 3a + 8a - 24$

$a^2 + 5a - 24$

Use a table to find the product.

3. (y + 10)(y – 5)

$y^2 - 5y + 10y - 50$

$y^2 + 5y - 50$

4. (5g + 3)(g + 8)

$5g^2 + 40g + 3g + 24$

$5g^2 + 43g + 24$

Use the FOIL method to find the product.

5. (w + 9)(w + 6)

$w^2 + 9w + 6w + 54$

$w^2 + 15w + 54$

6. (x – 4)(x + 8)

$x^2 - 4x + 8x - 32$

$x^2 + 4x - 32$

Intermediate Algebra – Chapter 5

Lesson 1

7. $(8 - 4x)(2x + 6)$

$16x - 8x^2 + 48 - 24x$

$-8x^2 - 8x + 48$

8. $(v - 3)(v^2 + 8v)$

$v^3 + 8v^2 - 3v^2 - 24v$

$v^3 + 5v^2 - 24v$

Find the product.

9. $(x + 1)(x^2 + 4x + 8)$

$x^3 + 4x^2 + 8x + x^2 + 4x + 8$

$x^3 + 5x^2 + 12x + 8$

10. $(x - 2)(x^2 - 5x + 1)$

$x^3 - 5x^2 + x - 2x^2 + 10x - 2$

$x^3 - 7x^2 + 11x - 2$

11. $(d + 6)(2d^2 - d + 7)$

$2d^3 - d^2 + 7d + 12d^2 - 6d + 42$

$2d^3 + 11d^2 + d + 42$

12. $3e^2 - 5e + 7)(6e + 1)$

$18e^3 + 3e^2 - 30e^2 - 5e + 42e + 7$

$18e^3 - 27e^2 + 37e + 7$

Intermediate Algebra – Chapter 5
Lesson 2

Name: _____ Date _____

Find the product.

1. $(x + 8)^2$ $(x+8)(x+8)$

$x^2+8x+8x+64$

$x^2+16x+64$

2. $(5x + 2)^2$ $(5x+2)(5x+2)$

$25x^2+10x+10x+4$

$25x^2+20x+4$

3. $(-12 - x)^2$ $(-12-x)(-12-x)$

$144+12x+12x+x^2$

$x^2+24x+144$

4. $(6x - 3y)^2$ $(6x-3y)(6x-3y)$

$36x^2-18xy-18xy+9y^2$

$36x^2-36xy+9y^2$

5. $(x - 7)(x + 7)$

$x^2-7x+7x-49$

x^2-49

6. $(x + 6)(x - 6)$

$x^2-6x+6x-36$

x^2-36

Lesson 2

7. (7m + 8n)(7m − 8n)

$49m^2 + 56mn - 56mn - 64n^2$

$49m^2 - 64n^2$

8. (−5g − 2h)(−5g + 2h)

$25g^2 - 10gh + 10gh - 4h^2$

$25g^2 - 4h^2$

Write a polynomial that represents the area of the square.

9.

	x	4
x	x^2	$4x$
4	$4x$	16

$x^2 + 8x + 16$

10.

	x	7	x
x	x^2	$7x$	x^2
7	$7x$	49	$7x$
x	x^2	$7x$	x^2

$4x^2 + 28x + 49$

11.

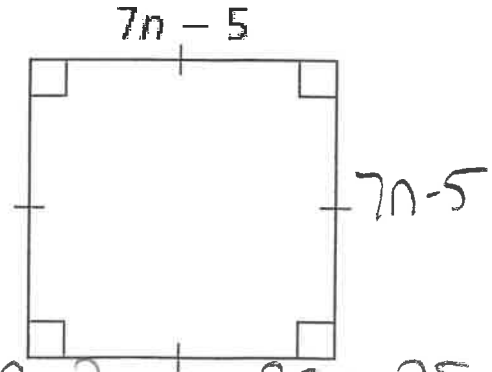

$49n^2 - 35n - 35n + 25$

$49n^2 - 70n + 25$

12.

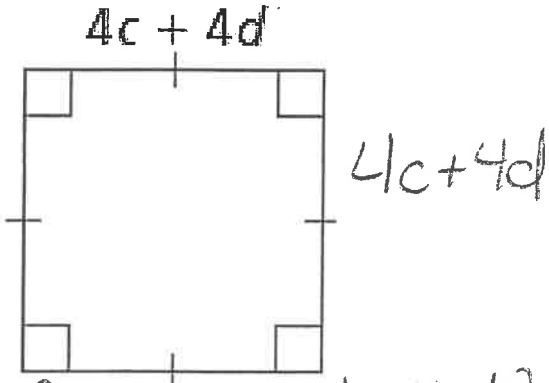

$16c^2 + 16cd + 16cd + 16cd^2$

$16c^2 + 32cd + 16cd^2$

Intermediate Algebra – Chapter 5
Lesson 3, Day 1

Name _____ Date _____

Find the sum.

1. $(8x^7-6x^5+4x^3-6x) + (15x^6+4x^5-3x^3+2)$

$8x^7+15x^6-2x^5+x^3-6x+2$

2. $(8x^4-2x^3+9x^2+10x) + (6x^4-5x^3-9x^2-11x-9)$

$14x^4-7x^3-2x^2-x-9$

3. $(3x^2+4x-1) + (-2x^2-3x+2)$

x^2+x+1

4. $(7x^6+2x^5-3x^2+9x) + (5x^5+8x^3-6x^2+2x-5)$

$7x^6+7x^5+8x^3-9x^2+11x-5$

5. $(9x^4-3x^3+4x^2+5x+7) + (11x^4-4x^2-11x-9)$

Find the difference.

6. $(3x^3-2x^2+4x-8) - (5x^3+12x^2-3x-4)$

$3x^3-2x^2+4x-8-5x^3-12x^2+3x+4$

$-2x^3-14x^2+7x-4$

7. $(7x^4-9x^3-4x^2+5x+6) - (2x^4+3x^3-6x^2+2x-5)$

$7x^4-9x^3-4x^2+5x+6-2x^4-3x^3+6x^2-2x+5$

$5x^4-12x^3+2x^2+3x+11$

8. $(4x^5-7x^3-9x^2+18) - (14x^5-8x^4+11x^2+x)$

$4x^5-7x^3-9x^2+18-14x^5+8x^4-11x^2-x$

$-10x^5+8x^4-7x^3-20x^2-x+18$

9. $(8x^5+6x^3-2x^2+10x) - (9x^5-x^3-13x^2+4)$

$8x^5+6x^3-2x^2+10x-9x^5+x^3+13x^2-4$

$-x^5+7x^3+11x^2+10x-4$

10. $(11x^4-9x^2+3x+11) - (2x^4+6x^3+2x-9)$

$11x^4-9x^2+3x+11-2x^4-6x^3-2x+9$

$9x^4-6x^3-9x^2+x+20$

Intermediate Algebra – Chapter 5
Lesson 3, Day 2

Name _____ Date _____

Find the product.

1. $7x^3(5x^2+3x+1)$

$35x^5+21x^4+7x^3$

2. $-4x^5(11x^3+2x^2+9x+1)$

$-44x^8-8x^7-36x^6-4x^5$

3. $(5x^2-4x+6)(-2x+3)$

$-10x^3+8x^2-12x+15x^2-12x+18$

$-10x^3+23x^2-24x+18$

4. $(-x-3)(2x^2+5x+8)$

$-2x^3-5x^2-8x-6x^2-15x-24$

$-2x^3-11x^2-23x-24$

5. $(x^2-2x-4)(x^2-3x-5)$

$x^4-3x^3-5x^2-2x^3+6x^2+10x-4x^2+12x+20$

$x^4-5x^3-3x^3+22x+20$

6. $(3x^2+x-2)(-4x^2-2x-1)$

$-12x^4-6x^3-3x^2-4x^2-2x^3-x+8x^2+4x+2$

$-12x^4-8x^3+x^2+2x+2$

7. $(x-3)(x+2)(x+4)$

$(x-3)(x^2+6x+8) \rightarrow x^3+6x^2+8x-3x^2-18x-24$

$x^3+3x^2-10x-24$

8. $(x-5)(x+2)(x-6) \rightarrow (x-5)(x^2-4x-12)$

$x^3-4x^2-12x-5x^2+20x+60$

$x^3-9x^2+8x+60$

9. $(3x-4)(5-2x)(4x+1) \rightarrow (3x-4)(20x+5-8x^2-2x)$

$(3x-4)(-8x^2+18x+5) \rightarrow -24x^3+54x^2+15x+32x^2-72x-20$

$-24x^3+86x^2-57x-20$

10. $(4-5x)(1-2x)(3x+2)$ $(4-5x)(3x+2-6x^2-4x)$

$(4-5x)(-6x^2-x+2) \rightarrow -24x^2-4x+8+30x^3+5x^2-10x$

$30x^3-19x^2-14x+8$

Intermediate Algebra – Chapter 5
Lesson 4, Day 1

Name _____ Date _____

Divide using polynomial long division.

1. $(x^2 + x - 17) \div (x - 4)$

$$\begin{array}{r} x+5 \\ x-4\overline{)\,x^2+x-17} \\ -x^2+4x \downarrow \\ \hline 5x-17 \\ -5x+20 \\ \hline 3 \end{array}$$

$$\boxed{x+5+\frac{3}{x-4}}$$

2. $(3x^2 - 14x - 5) \div (x - 5)$

$$\begin{array}{r} 3x+1 \\ x-5\overline{)\,3x^2-14x-5} \\ -3x^2+15x \downarrow \\ \hline x-5 \\ -x+5 \\ \hline 0 \end{array}$$

$$\boxed{3x+1}$$

3. $(x^3 + x^2 + x + 2) \div (x^2 - 1)$

$$\begin{array}{r} x+1 \\ x^2+0x-1\overline{)\,x^3+x^2+x+2} \\ -x^3-0x^2+x \downarrow \\ \hline x^2+2x+2 \\ -x^2-0x+1 \\ \hline 2x+3 \end{array}$$

$$\boxed{x+1+\frac{2x+3}{x^2-1}}$$

4. $(5x^4 - 2x^3 - 7x^2 - 39) \div (x^2 + 2x - 4)$

$$\begin{array}{r} 5x^2-12x+37 \\ x^2+2x-4\overline{)\,5x^4-2x^3-7x^2+0x-39} \\ -5x^4-10x^3+20x^2 \downarrow \\ \hline -12x^3+13x^2+0x \\ +12x^3+24x^2-48x \downarrow \\ \hline 37x^2-48x-39 \\ -37x^2-74x+148 \\ \hline 122x+109 \end{array}$$

$$\boxed{5x^2-12x-4+\frac{-122x+109}{x^2+2x-4}}$$

5. $(7x^3 + x^2 + x) \div (x^2 + 1)$

$$\begin{array}{r} 7x+1 \\ x^2+0x+1\overline{)\,7x^3+x^2+x+0} \\ -7x^3-0x^2-7x \\ \hline x^2-6x+0 \\ -x^2-0x-1 \\ \hline -6x-1 \end{array}$$

$$\boxed{7x+1+\frac{-6x-1}{x^2+1}}$$

6. $(4x^4 + 5x - 4) \div (x^2 - 3x - 2)$

$$\begin{array}{r} 4x^2+12x+44 \\ x^2-3x-2\overline{)\,4x^4+0x^3+0x^2+5x-4} \\ -4x^4+12x^3+8x^2 \downarrow \\ \hline 12x^3+8x^2+5x \\ -12x^3+36x^2+24x \downarrow \\ \hline 44x^2+29x-4 \\ -44x^2-132x-88 \\ \hline 103x-92 \end{array}$$

$$\boxed{4x^2+12x+144+\frac{103x-92}{x^2-3x-2}}$$

Intermediate Algebra – Chapter 5
Lesson 4, Day 2

Name _____ Date _____

Divide using synthetic division.

1. $(x^2 + 8x + 1) \div (x - 4)$

$$\begin{array}{r|rrr} & 1 & 8 & 1 \\ 4 & \downarrow & 4 & 48 \\ \hline & 1 & 12 & 49 \end{array}$$

$$\boxed{x + 12 + \frac{49}{x-4}}$$

2. $(4x^2 - 13x - 5) \div (x - 2)$

$$\begin{array}{r|rrr} & 4 & -13 & -5 \\ 2 & \downarrow & 8 & -10 \\ \hline & 4 & -5 & -15 \end{array}$$

$$\boxed{4x - 5 + \frac{-15}{x-2}}$$

3. $(2x^2 - x + 7) \div (x + 5)$

$$\begin{array}{r|rrr} & 2 & -1 & 7 \\ -5 & \downarrow & -10 & 55 \\ \hline & 2 & -11 & 62 \end{array}$$

$$\boxed{2x - 11 + \frac{62}{x+5}}$$

4. $(x^3 - 4x + 6) \div (x + 3)$

$$\begin{array}{r|rrrr} & 1 & 0 & -4 & 6 \\ -3 & \downarrow & -3 & 9 & -15 \\ \hline & 1 & -3 & 5 & -9 \end{array}$$

$$\boxed{x^2 - 3x + 5 + \frac{-9}{x+3}}$$

5. $(x^2 + 9) \div (x - 3)$

$$\begin{array}{r|rrr} & 1 & 0 & 9 \\ 3 & \downarrow & 3 & 9 \\ \hline & 1 & 3 & 18 \end{array}$$

$$\boxed{x + 3 + \frac{18}{x-3}}$$

6. $(3x^3 - 5x^2 - 2) \div (x - 1)$

$$\begin{array}{r|rrrr} & 3 & -5 & 0 & -2 \\ 1 & \downarrow & 3 & -2 & -2 \\ \hline & 3 & -2 & -2 & -4 \end{array}$$

$$\boxed{3x^2 - 2x - 2 + \frac{-4}{x-1}}$$

7. $(x^4 - 5x^3 - 8x^2 + 13x - 12) \div (x - 6)$

$$\begin{array}{r|rrrrr} & 1 & -5 & -8 & 13 & -12 \\ 6 & \downarrow & 6 & 6 & -12 & 6 \\ \hline & 1 & 1 & -2 & 1 & -6 \end{array}$$

$$\boxed{x^3 + x^2 - 2x + 1 + \frac{-6}{x-6}}$$

8. $(x^4 + 4x^3 + 16x - 35) \div (x + 5)$

$$\begin{array}{r|rrrrr} & 1 & 4 & 0 & 16 & -35 \\ -5 & \downarrow & -5 & 5 & -25 & 45 \\ \hline & 1 & -1 & 5 & -9 & 10 \end{array}$$

$$\boxed{x^3 - x^2 + 5x - 9 + \frac{10}{x+5}}$$

Intermediate Algebra – Chapter 5
Lesson 5

Name: _____ Date _____

Solve the equation.

1. $x(x + 7) = 0$

$\boxed{x=0}$ $x+7=0$
$-7 \quad -7$
$\boxed{x=-7}$

2. $r(r - 10) = 0$

$\boxed{r=0}$ $r-10=0$
$+10 \quad +10$
$\boxed{r=10}$

3. $12t(t - 5) = 0$

$\frac{12t}{12}=\frac{0}{12}$ $t-5=0$
$+5 \quad +5$
$\boxed{t=0}$ $\boxed{t=5}$

4. $-2v(v + 1) = 0$

$\frac{-2v}{-2}=\frac{0}{-2}$ $v+1=0$
$-1 \quad -1$
$\boxed{v=0}$ $\boxed{v=-1}$

5. $(s - 9)(s - 1) = 0$

$s-9=0$ $s-1=0$
$+9 \quad +9$ $+1 \quad +1$
$\boxed{s=9}$ $\boxed{s=1}$

6. $(y + 2)(y - 6) = 0$

$y+2=0$ $y-6=0$
$-2 \quad -2$ $+6 \quad +6$
$\boxed{y=-2}$ $\boxed{y=6}$

7. $(2a - 6)(3a + 15) = 0$

$2a-6=0$ $3a+15=0$
$+6 \quad +6$ $-15 \quad -15$
$\frac{2a}{2}=\frac{6}{2}$ $\frac{3a}{3}=\frac{-15}{3}$
$\boxed{a=3}$ $\boxed{a=-5}$

8. $(4x + 3)(x + 2) = 0$

$4x+3=0$ $x+2=0$
$-3 \quad -3$ $-2 \quad -2$
$\frac{4x}{4}=\frac{-3}{4}$ $\boxed{x=-2}$
$\boxed{x=-\frac{3}{4}}$

9. $(5x + 4)^2 = 0$

$5x+4=0$
$-4 \quad -4$
$\frac{5x}{5}=\frac{-4}{5}$
$\boxed{x=\frac{-4}{5}}$

10. $(x - 8)^2 = 0$

$x-8=0$
$+8 \quad +8$
$\boxed{x=8}$

11. $(3 - 2x)(7 - x) = 0$

$3 - 2x = 0$ $\quad 7 - x = 0$

$-3 \quad -3 \quad -7 \quad -7$

$\frac{-2x}{-2} = \frac{-3}{-2}$ $\quad \frac{-x}{-1} = \frac{-7}{-1}$

$\boxed{x = \frac{3}{2}}$ $\quad \boxed{x = 7}$

12. $(2 - 4d)(2 + 4d) = 0$

$2 - 4d = 0$ $\quad 2 + 4d = 0$

$-2 \quad -2 \quad -2 \quad -2$

$\frac{-4d}{-4} = \frac{-2}{-4}$ $\quad \frac{4d}{4} = \frac{-2}{4}$

$\boxed{d = \frac{1}{2}}$ $\quad \boxed{d = -\frac{1}{2}}$

13. $x(x + 2)(x - 1) = 0$

$\boxed{x = 0}$ $\quad x + 2 = 0$ $\quad x - 1 = 0$

$-2 \quad -2 \quad +1 \quad +1$

$\boxed{x = -2}$ $\quad \boxed{x = 1}$

14. $5p(2p - 3)(p + 7) = 0$

$\frac{5p}{5} = \frac{0}{5}$ $\quad 2p - 3 = 0$ $\quad p + 7 = 0$

$+3 \quad +3 \quad -7 \quad -7$

$\boxed{p = 0}$ $\quad \frac{2p}{2} = \frac{3}{2}$ $\quad \boxed{p = -7}$

$\boxed{p = \frac{3}{2}}$

15. $(r - 4)^2(r + 8) = 0$

$r - 4 = 0$ $\quad r + 8 = 0$

$+4 \quad +4 \quad -8 \quad -8$

$\boxed{r = 4}$ $\quad \boxed{r = -8}$

16. $W(w - 6)^2 = 0$

$\boxed{W = 0}$ $\quad w - 6 = 0$

$+6 \quad +6$

$\boxed{W = 6}$

17. $(15 - 5c)(5c + 5)(-c + 6) = 0$

$15 - 5c = 0$ $\quad 5c + 5 = 0$ $\quad -c + 6 = 0$

$-15 \quad -15 \quad -5 \quad -5 \quad -6 \quad -6$

$\frac{-5c}{-5} = \frac{-15}{-5}$ $\quad \frac{5c}{5} = \frac{-5}{5}$ $\quad \frac{-c}{-1} = \frac{-6}{-1}$

$\boxed{c = 3}$ $\quad \boxed{c = -1}$ $\quad \boxed{c = 6}$

18. $(2 - n)(6 + \frac{2}{3}n)(n - 2) = 0$

$2 - n = 0$ $\quad 6 + \frac{2}{3}n = 0$ $\quad n - 2 = 0$

$-2 \quad -2 \quad -6 \quad -6 \quad +2 \quad +2$

$\frac{-n}{-1} = \frac{-2}{-1}$ $\quad (\frac{3}{2})\frac{2}{3}n = -6(\frac{3}{2})$ $\quad \boxed{n = 2}$

$\boxed{n = 2}$ $\quad n = -\frac{18}{2}$

$\boxed{n = -9}$

Factor the Polynomial.

19. $5x^2 + 45x$

$\boxed{5x(x+9)}$

20. $6d^2 - 21d$

$\boxed{3d(2d-7)}$

21. $3y^3 - 9y^2$

$\boxed{3y^2(y-3)}$

22. $20x^3 + 30x^2$

$\boxed{10x^2(2x+3)}$

23. $5n^6 + 2n^5$

$\boxed{n^5(n+2)}$

24. $12a^4 + 8a$

$\boxed{4a(3a^3+2)}$

Solve the equation.

25. $4p^2 - p = 0$

$p(4p-1)=0$

$\boxed{p=0}$

$4p-1=0$
$\quad +1 \quad +1$

$\frac{4p}{4}=\frac{1}{4}$

$\boxed{p=\frac{1}{4}}$

26. $6m^2 + 12m = 0$

$6m(m+2)=0$

$\frac{6m}{6}=\frac{0}{6}$ $\quad m+2=0$
$\quad -2 \quad -2$

$\boxed{m=0}$ $\quad \boxed{m=-2}$

27. $25c + 10c^2 = 0$

$5c(5+2c)=0$

$\frac{5c}{5}=\frac{0}{5}$ $\quad 5+2c=0$
$\quad -5 \quad -5$

$\boxed{c=0}$

$\frac{2c}{2}=\frac{-5}{2}$

$\boxed{c=\frac{-5}{2}}$

28. $18x - 2x^2 = 0$

$2x(9-x)=0$

$\frac{2x}{2}=\frac{0}{2}$ $\quad 9-x=0$
$\quad -9 \quad -9$

$\boxed{x=0}$

$\frac{-x}{-1}=\frac{-9}{-1}$

$\boxed{x=9}$

29. $3x^2 = 9x$
$\quad -9x \quad -9x$

$3x^2-9x=0$

$3x(x-3)=0$

$\frac{3x}{3}=\frac{0}{3}$ $\quad x-3=0$
$\quad +3 \quad +3$

$\boxed{x=0}$ $\quad \boxed{x=3}$

30. $-28r = 4r^2$
$\quad -4r^2 \quad -4r^2$

$-4r^2-28r=0$

$-4r(r+4)=0$

$\frac{-4r}{-4}=\frac{0}{-4}$ $\quad r+4=0$
$\quad -4 \quad -4$

$\boxed{r=0}$ $\quad \boxed{r=-4}$

Intermediate Algebra – Chapter 5
Lesson 6

Name: _____ Date _____

Factor the polynomial.

1. $x^2 + 8x + 7$

$(x+7)(x+1)$

2. $x^2 + 10x + 21$

$(x+7)(x+3)$

3. $n^2 + 9n + 20$

$(n+5)(n+4)$

4. $x^2 + 11x + 30$

$(x+6)(x+5)$

5. $h^2 + 11h + 18$

$(h+9)(h+2)$

6. $y^2 + 13y + 40$

$(y+8)(y+5)$

7. $v^2 - 5v + 4$

$(v-4)(v-1)$

8. $x^2 - 13x + 22$

$(x-11)(x-2)$

9. $d^2 - 5d + 6$

$(d-3)(d-2)$

10. $k^2 - 10k + 24$

$(k-6)(k-4)$

11. $w^2 - 17w + 72$

$(w-9)(w-8)$

12. $j^2 - 13j + 42$

$(j-6)(j-7)$

13. $x^2 + 3x - 4$

$(x+4)(x-1)$

14. $x^2 - 7x - 18$

$(x-9)(x+2)$

15. $n^2 + 4n - 12$

$(n+6)(n-2)$

16. $x^2 + 3x - 40$

$(x+8)(x-5)$

17. $y^2 + 2y - 48$

$(y+8)(y-6)$

18. $h^2 + 6h - 27$

$(h+9)(h-3)$

19. $x^2 - x - 20$

$(x-5)(x+4)$

20. $m^2 - 6m - 7$

$(m-7)(m+1)$

21. $-6x - 16 + x^2$

$x^2-6x-16$

$(x-8)(x+2)$

22. $-7y + y^2 - 30$

$y^2-7y-30$

$(y-10)(y+3)$

Solve the equation.

23. $m^2 + 3m + 2 = 0$

$(m+2)(m+1)=0$

$m+2=0$ $\quad$ $m+1=0$

$-2 \quad -2$ $\quad$ $-1 \quad -1$

$\boxed{m=-2}$ $\quad$ $\boxed{m=-1}$

24. $n^2 - 9n + 18 = 0$

$(n-6)(n-3)=0$

$n-6=0$ $\quad$ $n-3=0$

$+6 \quad +6$ $\quad$ $+3 \quad +3$

$\boxed{n=6}$ $\quad$ $\boxed{n=3}$

25. $x^2 + 5x - 14 = 0$

$(x+7)(x-2)=0$

$x+7=0$ $\quad$ $x-2=0$

$-7 \quad -7$ $\quad$ $+2 \quad +2$

$\boxed{x=-7}$ $\quad$ $\boxed{x=2}$

26. $v^2 + 11v - 26 = 0$

$(v+13)(v-2)=0$

$v+13=0$ $\quad$ $v-2=0$

$-13 \quad -13$ $\quad$ $+2 \quad +2$

$\boxed{v=-13}$ $\quad$ $\boxed{v=2}$

27. $t^2 + 15t = -36$

$+36$

$t^2+15t+36=0$

$(t+12)(t+3)=0$

$t+12=0$ $\quad$ $t+3=0$

$-12 \quad -12$ $\quad$ $-3 \quad -3$

$\boxed{t=-12}$ $\quad$ $\boxed{t=-3}$

28. $n^2 - 5n = 24$

-24

$n^2-5n-24=0$

$(n-8)(n+3)=0$

$n-8=0$ $\quad$ $n+3=0$

$+8 \quad +8$ $\quad$ $-3 \quad -3$

$\boxed{n=8}$ $\quad$ $\boxed{n=-3}$

29. $a^2 + 5a - 20 = 30$

$-30 \quad -30$

$a^2+5a-50=0$

$(a+10)(a-5)=0$

$a+10=0$ $\quad$ $a-5=0$

$-10 \quad -10$ $\quad$ $15 \quad +5$

$\boxed{a=-10}$ $\quad$ $\boxed{a=5}$

30. $y^2 - 2y - 8 = 7$

$-7 \quad -7$

$y-2y-15=0$

$(y-5)(y+3)=0$

$y-5=0$ $\quad$ $y+3=0$

$+5 \quad +5$ $\quad$ $-3 \quad -3$

$\boxed{y=5}$ $\quad$ $\boxed{y=-3}$

31. $m^2 + 10m = 15m - 34$

$-15m \quad 34 \quad -15m \quad +34$

$m^2-5m+34=0$

Not factorable

32. $b^2 + 5 = 8b - 10$

$-8b+10 \quad -8b \quad +10$

$b^2-8b+15=0$

$(b-5)(b-3)=0$

$b-5=0$ $\quad$ $b-3=0$

$+5 \quad +5$ $\quad$ $+3 \quad +3$

$\boxed{b=5}$ $\quad$ $\boxed{b=3}$

Intermediate Algebra – Chapter 5
Lesson 7

Name: _____ Date _____

Factor the polynomial.

1. $3x^2 + 3x - 6$

$3(x^2+x-2)$
$3(x+2)(x-1)$

2. $8x^2 + 8x - 48$

$8(x^2+x-6)$
$8(x+3)(x-2)$

3. $4k^2 + 28k + 48$

$4(k^2+7k+12)$
$4(k+4)(k+3)$

4. $6y^2 - 24y + 18$

$6(y^2-4y+3)$
$6(y-3)(y-1)$

5. $7x^2 - 63x + 140$

$7(x^2-9x+20)$
$7(x-5)(x-4)$

6. $9x^2 - 36x - 45$

$9(x^2-4x+5)$
$9(x-4)(x-1)$

7. $3h^2 + 11h + 6$

$(3h+2)(h+3)$

8. $8m^2 + 30m + 7$

$(4m+1)(2m+7)$

9. $6x^2 - 5x + 1$

$(3x-1)(2x-1)$

10. $10x^2 - 31x + 15$

$(5x-3)(2x-5)$

11. $3n^2 + 5n - 2$

$(3n-1)(n+2)$

12. $4x^2 + 4x - 3$

$(2x-1)(2x+3)$

13. $8x^2 - 10x - 12$

$2(4x^2-5x-6)$

$2(4x+3)(x-2)$

14. $18x^2 - 15x - 18$

$3(6x^2-5x-6)$

$3(3x+2)(2x-3)$

15. $-3x^2 + 11x - 6$

$-(3x^2-11x+6)$

$-(3x-2)(x-3)$

16. $-7x^2 - 25x - 12$

$-(7x^2+25x+12)$

$-(7x+4)(x+3)$

17. $-4x^2 + 19x + 5$

$-(4x^2 - 19x - 5)$

$-(4x+1)(x-5)$

18. $-8x^2 - 13x + 6$

$-(8x^2 + 13x - 6)$

$-(8x+3)(x-2)$

19. $-15y^2 - y + 28$

$-(15y^2 + y - 28)$

$-(5y+7)(3y-4)$

20. $-22x^2 + 29x - 9$

$-(22x^2 - 29x + 9)$

$-(11x-9)(2x-1)$

Solve the equation.

21. $5x^2 - 5x - 30 = 0$

$5(x^2 - x - 6) = 0$

$5(x-3)(x+2) = 0$

$\cancel{5 \neq 0}$ $\quad x - 3 = 0$ $\quad x + 2 = 0$

$+3 \quad +3$ $\quad -2 \quad -2$

$\boxed{x = 3}$ $\quad \boxed{x = -2}$

22. $2k^2 - 5k - 18 = 0$

$2k^2 - 5k - 18 = 0$

$(2k-9)(k+2) = 0$

$2k - 9 = 0$ $\quad k + 2 = 0$

$+9 \quad +9$ $\quad -2 \quad -2$

$\frac{2k}{2} = \frac{9}{2}$ $\quad \boxed{k = -2}$

$\boxed{k = \frac{9}{2}}$

23. $-12n^2 - 11n = -15$

$+15 \quad +15$

$-12n^2 - 11n + 15 = 0$

$-(12n^2 + 11n - 5) = 0$

$-(4n+5)(3n-1) = 0$

$\cancel{-1 \neq 0}$ $\quad 4n + 5 = 0$ $\quad 3n - 1 = 0$

$-5 \quad -5$ $\quad +1 \quad +1$

$\frac{4n}{4} = \frac{-5}{4}$ $\quad \frac{3n}{3} = \frac{1}{3}$

$\boxed{n = -\frac{5}{4}}$ $\quad \boxed{n = \frac{1}{3}}$

24. $14x^2 - 2 = -3x$

$+3x \quad +3x$

$14x^2 + 3x - 2 = 0$

$(7x-1)(2x+2) = 0$

$7x - 1 = 0$ $\quad 2x + 2 = 0$

$+1 \quad +1$ $\quad -2 \quad -2$

$\frac{7x}{7} = \frac{1}{7}$ $\quad \frac{2x}{2} = \frac{-2}{2}$

$\boxed{x = \frac{1}{7}}$ $\quad \boxed{x = -1}$