Algebra 1 – Chapter 5
Lesson 1
Name: Key

Date _____

Tell whether the ordered pair is a solution of the system of linear equations.

1. (2, 6); $x + y = 8$
   $3x - y = 0$

$2+6=8$
$8=8$ ✓

$3(2)-6=0$
$6-6=0$
$0=0$ ✓

Yes!

2. (8, 2); $x - y = 6$
   $2x - 10y = 4$

$8-2=6$
$6=6$ ✓

$2(8)-10(2)=4$
$16-20=4$
$-4 \neq 4$

No!

3. (-4, -2); $y = 2x + 6$
   $y = -3x - 14$

$-2=2(-4)+6$
$-2=-8+6$
$-2=-2$ ✓

$-2=-3(-4)-14$
$-2=12-14$
$-2=-2$ ✓

Yes!

4. (-2, 1); $6x + 5y = -7$
   $2x - 4y = -8$

$6(-2)+5(1)=-7$
$-12+5=-7$
$-7=-7$ ✓

$2(-2)-4(1)=-8$
$-4-4=-8$
$-8=-8$ ✓

Yes!

Solve the system of linear equations by graphing.

5. $y = -x + 7$
   $y = x + 1$

Slope: -1
y-int: 7
Slope: 1
y-int: 1

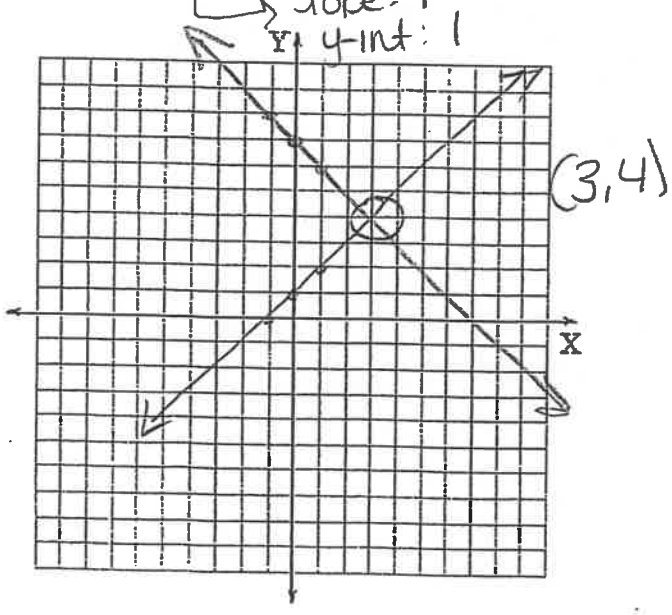

6. $y = -x + 4$
   $y = 2x - 8$

Slope: -1
y-int: 4
Slope: 2
y-int: -8

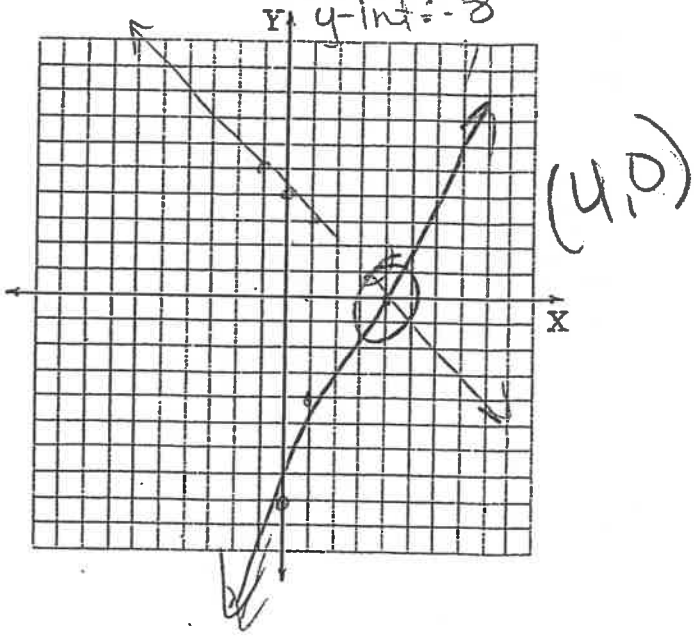

Algebra 1 – Chapter 5
Lesson 1

7. $9x + 3y = -3$
$2x - y = -4$

$9x + 3y = -3$
$-9x \quad -9x$
$\frac{3y}{3} = \frac{-9x}{3} - \frac{3}{3}$
$y = -3x - 1$

$2x - y = -4$
$-2x \quad -2x$
$-y = -2x - 4$
$y = 2x + 4$

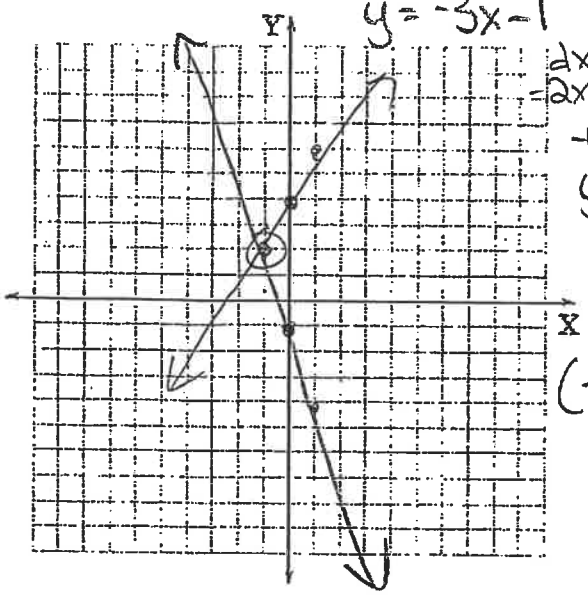

$(-1, 2)$

8. $4x - 4y = 20$
$y = -5$

$4x - 4y = 20$
$-4x \quad -4x$
$\frac{-4y}{-4} = \frac{-4x}{-4} + \frac{20}{-4}$
$y = x - 5$

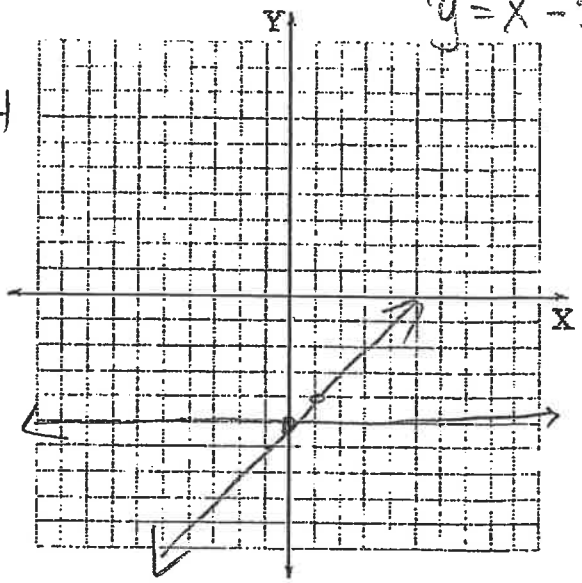

$(0, -5)$

9. $x - 4y = -4$
$-3x - 4y = 12$

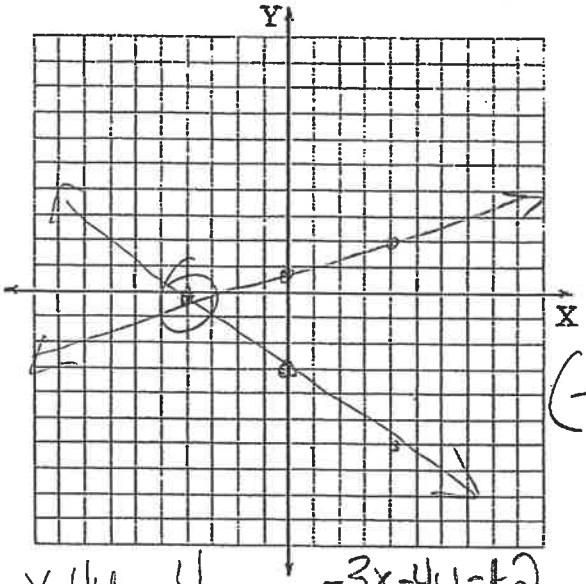

$(-4, 0)$

$x - 4y = -4$
$-x \quad -x$
$\frac{-4y}{-4} = \frac{-x}{-4} - \frac{4}{-4}$
$y = \frac{1}{4}x + 1$

$-3x - 4y = 12$
$+3x \quad +3x$
$\frac{-4y}{-4} = \frac{3x}{-4} + \frac{12}{-4}$
$y = -\frac{3}{4}x - 3$

10. $3y + 4x = 3$
$x + 3y = -6$

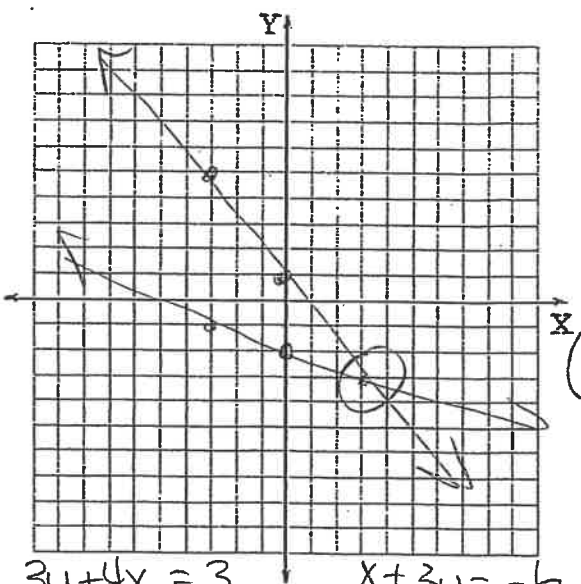

$(3, -3)$

$3y + 4x = 3$
$-4x \quad -4x$
$\frac{3y}{3} = -\frac{4}{3}x + \frac{3}{3}$
$y = -\frac{4}{3}x + 1$

$x + 3y = -6$
$-x \quad -x$
$\frac{3y}{3} = -\frac{x}{3} - \frac{6}{3}$
$y = -\frac{1}{3}x - 2$

Algebra 1 – Chapter 5
Lesson 2
Name: Key

Date _____

Tell which equation you would choose to solve for one of the variables. Explain.

1. $x + 4y = 10$
   $x - 2y = 0$

2. $3x - y = 0$
   $2x + y = -10$

3. $5x + 3y = 11$
   $5x - y = 5$

4. $3x - 2y = 19$
   $x + y = 8$

Solve the system of linear equations by substitution. Check your solution.

5. $x = 17 - 4y$
   $y = x - 2$

$x = 17 - 4(x-2)$
$x = 17 - 4x + 8$
$x = 25 - 4x$
$+4x \quad +4x$
$\frac{5x}{5} = \frac{25}{5}$
$x = 5$

$y = 5 - 2$
$y = 3$

$\boxed{(5, 3)}$

6. $6x - 9 = y$
   $y = -3x$

$6x - 9 = -3x$
$-6x \quad -6x$
$\frac{-9}{-9} = \frac{-9x}{-9}$
$1 = x$

$y = -3(1)$
$y = -3$

$\boxed{(1, -3)}$

7. $x = 16 - 4y$
   $3x + 4y = 8$

$3(16 - 4y) + 4y = 8$
$48 - 12y + 4y = 8$
$48 - 8y = 8$
$-48 \quad -48$
$\frac{-8y}{-8} = \frac{-40}{-8}$
$y = 5$

$x = 16 - 4(5)$
$x = 16 - 20$
$x = -4$

$\boxed{(-4, 5)}$

8. $-5x + 3y = 23$
   $y = 10x - 8$

$-5x + 3(10x - 8) = 23$
$-5x + 30x - 24 = 23$
$25x - 24 = 23$
$+24 \quad +24$
$\frac{25x}{25} = \frac{47}{25}$
$x = 47/25$

$y = 10(\frac{47}{25}) - 8$
$y = \frac{94}{5} - \frac{40}{5}$
$y = \frac{54}{5}$

$\boxed{(\frac{47}{25}, \frac{54}{5})}$

Algebra 1 – Chapter 5

Lesson 2

Solve the system of linear equations by using substitution. Check your solution.

9. $5x + 2y = 9$

$x + y = -3$

$-x \quad -x$

$y = -x - 3$

$5x + 2(-x - 3) = 9$

$5x - 2x - 6 = 9$

$3x - 6 = 9$

$+6 \quad +6$

$\frac{3x}{3} = \frac{15}{3}$

$\boxed{x = 5}$

$5 + y = -3$

$-5 \quad -5$

$y = -8$

$\boxed{(5, -8)}$

10. $11x - 7y = -14$

$x - 2y = -4$

$+2y \quad +2y$

$x = 2y - 4$

$11(2y - 4) - 7y = -14$

$22y - 44 - 7y = -14$

$15y - 44 = -14$

$+44 \quad +44$

$\frac{15y}{15} = \frac{30}{15}$

$y = 2$

$x + 2(2) = -4$

$x + 4 = -4$

$-4 \quad -4$

$x = -8$

$\boxed{(-8, 2)}$

11. A farmer plants corn and wheat on a 180-acre farm. The farmer wants to plant three times as many acres of corn as wheat. Write a system of linear equations that represents this situation. How many acres of each crop should the farmer plant?

x = corn

y = wheat

$x + y = 180$

$x = 3y$

$3y + y = 180$

$\frac{4y}{4} = \frac{180}{4}$

$y = 45$

$x = 3(45)$

$x = 135$

12. A company that offers tubing trips down a river rents tubes for a person to use and "cooler" tubes to carry food and water. A group spends $270 to rent a total of 15 tubes. Write a system of linear equations that represents this situation. How many of each type of tube does the group rent?

x = tube

y = cooler

$x + y = 15$

Typo - equation not finished

- Sorry! -

Algebra 1 – Chapter 5
Lesson 3
Name: _____ Date _____

Solve the system of linear equations by elimination.

1. $x + 2y = 13$
$-x + y = 5$

$\frac{3y}{3} = \frac{18}{3}$

$y = 6$

$x + 2(6) = 13$

$x + 12 = 13$

$-12 \quad -12$

$x = 1$

$\boxed{(1, 6)}$

2. $9x + y = 2$
$-4x - x = -17$

$\frac{5x}{5} = \frac{-15}{5}$

$x = -3$

$9(-3) + y = 2$

$-27 + y = 2$

$+27 \quad +27$

$y = 29$

$\boxed{(-3, 29)}$

3. $-x + y = 4$
$x + 3y = 4$

$\frac{4y}{4} = \frac{8}{4}$

$y = 2$

$-x + 2 = 4$

$-2 \quad -2$

$\frac{-x}{-1} = \frac{2}{-1}$

$\boxed{x = -2}$

$\boxed{(-2, 2)}$

4. $4x - 9y = -21$
$-4x - 3y = 9$

$\frac{-12y}{-12} = \frac{-12}{-12}$

$y = 1$

$4x - 9(1) = -21$

$4x - 9 = -21$

$+9 \quad +9$

$\frac{4x}{4} = \frac{-12}{4}$

$x = -3$

$\boxed{(-3, 1)}$

Algebra 1 – Chapter 5

Lesson 3

Solve the system of liner equations by elimination.

5. $8x - 5y = 11 \rightarrow 8x - 5y = 11$

$4x - 3y = 5 \xrightarrow{\cdot -2} -8x + 6y = -10$

$y = 1$

$8x - 5(1) = 11$

$8x - 5 = 11$

$+5 \quad +5$

$\frac{8x}{8} = \frac{16}{8}$

$x = 2$

$\boxed{(2, 1)}$

6. $10x - 9y = 46 \rightarrow 10x - 9y = 46$

$-2x + 3y = 10 \xrightarrow{-5} -10x + 15y = 50$

$\frac{6y}{6} = \frac{96}{6}$

$y = 16$

$10x - 9(16) = 46$

$10x - 144 = 46$

$+144 \quad +144$

$\frac{10x}{10} = \frac{190}{10}$

$x = 19$

$\boxed{(19, 16)}$

7. $-2x - 5y = 9 \xrightarrow{\cdot 3} -6x - 15y = 27$

$3x + 11y = 4 \xrightarrow{\cdot 2} 6x + 22y = 8$

$\frac{7y}{7} = \frac{35}{7}$

$y = 5$

$-2x - 5(5) = 9$

$-2x - 25 = 9$

$+25 \quad +25$

$\frac{-2x}{-2} = \frac{34}{-2}$

$x = -17$

$\boxed{(-17, 5)}$

8. $12x - 7y = -2 \xrightarrow{\cdot -2} -24x + 14y = 4$

$8x + 11y = 30 \xrightarrow{\cdot 3} 24x + 33y = 90$

$\frac{47y}{47} = \frac{94}{47}$

$y = 2$

$12x - 7(2) = -2$

$12x - 14 = -2$

$+14 \quad +14$

$\frac{12x}{12} = \frac{12}{12}$

$x = 1$

$\boxed{(1, 2)}$

Algebra 1 – Chapter 5
Lesson 3

Solve the system of linear equations using any method. Explain why you chose the method.

9. $-6y + 2 = -4x$

$y - 2 = x$
$+2 \quad +2$

$y = x + 2$

$-6(x+2) + 2 = -4x$

$-6x - 12 + 2 = -4x$

$-6x - 10 = -4x$
$+6x \qquad +6x$

$\frac{-10}{2} = \frac{2x}{2}$

$-5 = x$

$y - 2 = -5$
$+2 \quad +2$

$y = -3$

$\boxed{(-5, -3)}$

10. $3x + y = \frac{1}{3}$ $\xrightarrow{-3}$ $9x + 3y = \frac{3}{3}$

$2x - 3y = \frac{8}{3}$ $\longrightarrow$ $2x - 3y = \frac{8}{3}$

$\frac{11x}{11} = \frac{11}{3}/11$

$x = \frac{11}{3} \cdot \frac{1}{11} = \frac{1}{3}$

$x = \frac{1}{3}$

$3(\frac{1}{3}) + y = \frac{1}{3}$

$1 + y = \frac{1}{3}$
$-1 \qquad -1$

$y = \frac{1}{3} - \frac{3}{3}$

$y = -\frac{2}{3}$

$\boxed{(\frac{1}{3}, -\frac{2}{3})}$

11. Solve for x, y, and z in the system of equations. Explain your steps.

$x + 7y + 3z = 29$
$3z + x - 2y = -7$
$5y = 10 - 2x$

Algebra 1 – Chapter 5
Lesson 4

Name: _____ **Date** _____

Solve the system of linear equations.

1. $y = -2x - 4$
$y = 2x - 4$

$2x - 4 = -2x - 4$
$+2x + 4 \quad +2x + 4$
$4x = 0$
$x = 0$

$y = 2(0) - 4$
$y = -4$
$\boxed{(0, -4)}$

2. $y = -6x - 8$
$y = -6x + 8$

$-6x + 8 = -6x - 8$
$+6x \quad -8 \quad +6x - 8$
$0 = -16$
$\boxed{\text{No Sol}}$

3. $\cancel{-x} + \cancel{2y} = 7$
$\cancel{x} - \cancel{2y} = 7$

$0 = 7$
$\boxed{\text{No Sol}}$

4. $\cancel{3x} - \cancel{y} = \cancel{6}$
$\cancel{-3x} + \cancel{y} = \cancel{-6}$

$0 = 0$
$\boxed{\text{Inf Many}}$

Algebra 1 – Chapter 5

Lesson 4

5. $4x + 4y = -8 \longrightarrow 4x+4y=-8$

$-2x - 2y = 4 \xrightarrow{-2} -4x-4y=8$

$0=0$

$\boxed{\text{Inf. Many}}$

6. $15x - 5y = -20 \longrightarrow 15x-5y=-20$

$-3x + y = 4 \xrightarrow{5} -15x+5y=20$

$0=0$

$\boxed{\text{Inf. Many}}$

Use only slopes and y-intercepts of the graphs of the equations to determine whether the system of linear equations has one solution, no solutions, or infinitely many solutions. Explain.

7. $y = 7x + 13$

$-21x + 3y = 39$

$+21x \quad +21x$

$\frac{3y}{3} = \frac{21x}{3} + \frac{39}{3}$

$y = 7x+13$

$y=7x+13$

Slopes: $7x + 7x$

y-int: $13 + 13$

$\boxed{\text{Inf. Many}}$

8. $y = -6x - 2$

$12x + 2y = -6$

$-12x \quad -12x$

$\frac{2y}{2} = \frac{-12x}{2} - \frac{6}{2}$

$y = -6x - 3$

$y=-6x-2$

Slopes: $-6 + -6$

y-int: $-2 + -3$

$\boxed{\text{No Sol}}$ Same slope different y-int

9. $4x + 3y = 27$

$4x - 3y = -27$

$4x+3y=27$

$-4x \quad -4x$

$\frac{3y}{3} = \frac{-4x}{3} + \frac{27}{3}$

$y = -\frac{4}{3}x + 9$

$4x-3y=-27$

$-4x \quad -4x$

$\frac{-3y}{-3} = \frac{-4x}{-3} - \frac{27}{-3}$

$y = \frac{3}{4}x + 9$

$\boxed{\text{One Sol}}$

10. $2x - 2y = 16$

$3x - 6y = 30$

$2x-2y=16$

$-2x \quad -2x$

$\frac{-2y}{-2} = \frac{-2x}{-2} + \frac{16}{-2}$

$y = x - 8$

$3x-6y=30$

$-3x \quad -3x$

$\frac{-6y}{-6} = \frac{-3x}{-6} + \frac{30}{-6}$

$y = \frac{1}{2}x - 5$

$\boxed{\text{One Solution}}$

Algebra 1 – Chapter 5
Lesson 7
Name: Key Date _____

Tell whether the ordered pair is a solution of the system of linear inequalities.

1. (-4, 3)

No

2. (-3, -1)

No

3. (-2, 5)

No

4. (1, 1)

No

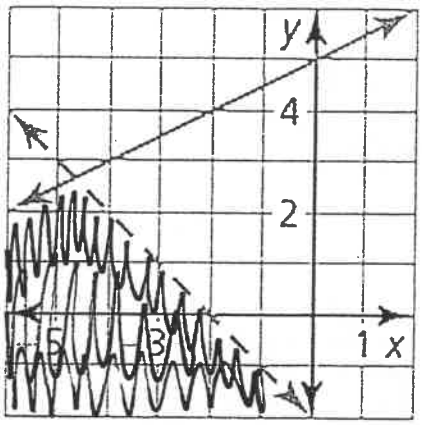

Tell whether the ordered pair is a solution of the system of linear inequalities.

5. (-5, 2); $y < 4$
$y > x + 3$

$y<4$ $y>x+3$
$2<4$ ✓ $2>-5+3$
$2>-2$ ✓

Yes!

6. (1, -1); $y > -2$
$y > x - 5$

$y>-2$ $y>x-5$
$-1>-2$ ✓ $-1>1-5$
$-1>-4$ ✓

Yes!

7. (0, 0); $y \le x + 7$
$y \ge 2x + 3$

$y \le x+7$ $y \ge 2x+3$
$0 \le 0+7$ $0 \ge 2(0)+3$
$0 \le 7$ ✓ $0 \ge 3$
No

No!

8. (4, -3); $y \le -x + 1$
$y \le 5x - 2$

$y \le -x+1$ $y \le 5x-2$
$-3 \le -4+1$ $-3 \le 5(4)-2$
$-3 \le -3$ ✓ $-3 \le 20-2$
$-3 \le 18$
No

No!

Algebra 1 – Chapter 5

Lesson 7

Graph the system of linear inequalities.

9. $y > -3$
   $y \geq 5x$

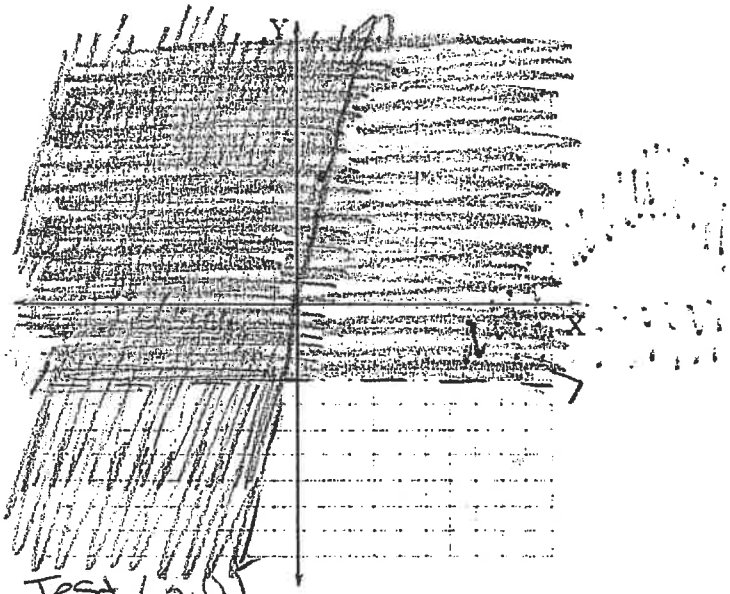

Test (3,0)

$0 \geq 5(3)$

$0 \geq 15$

No!

10. $y < x - 1$
    $y \geq x + 1$

Test (0,2)

$2 < 0 - 1$

$2 < -1$ NO

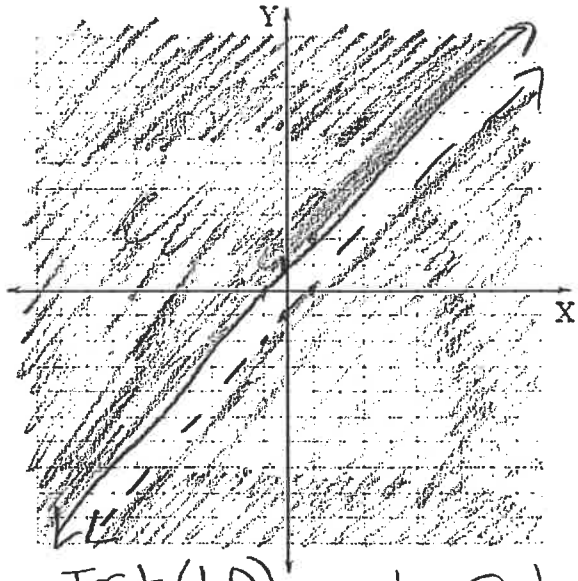

Test (1,0)

$0 \geq 1 + 1$

$0 \geq 2$ NO

No Solution

11. $x + y > 4$
    $y \geq \frac{3}{2}x - 9$

$x + y > 4$

$-x \quad -x$

$y > -x + 4$

Test (0,0)

$0 + 0 > 4$

$0 > 4$

No

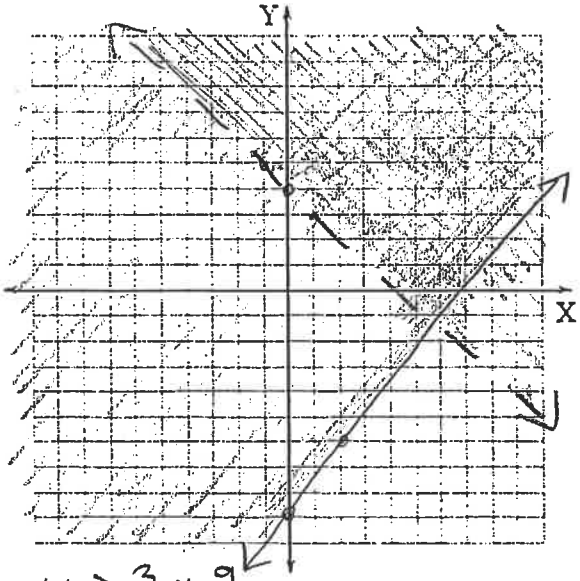

$y \geq \frac{3}{2}x - 9$

Test (0,0)

$0 \geq \frac{3}{2}(0) - 9$

$0 \geq -9$

Yes!

12. $2x + y \leq 5$
    $y + 2 \geq -2x$

$2x + y \leq 5$

$-2x \quad -2x$

$y \leq -2x + 5$

Test (0,0)

$2(0) + (0) \leq 5$

$0 \leq 5$ Ye

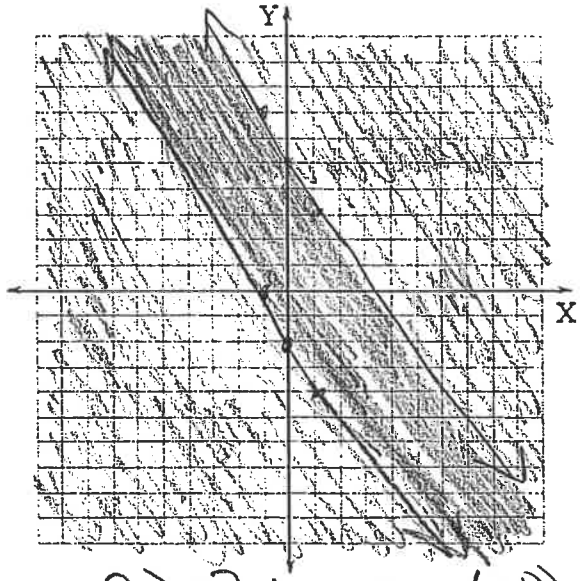

$y + 2 \geq -2x$

$-2 \quad -2$

$y \geq -2x - 2$

Test (0,0)

$0 + 2 \geq -2(0)$

$2 \geq 0$

Yes